KOHLER. Faucets

Tournant™

Semi-Professional Kitchen Sink Faucet

K-77515

Features

- Semi-Professional style faucet with an easy to clean coated hose and removable coil.
- Unique three-function sprayhead allows you to tackle tasks such as cleaning, rinsing and filling with Sweep® Spray, BerrySoft® spray, and aerated stream.
- Sweep® spray creates a wide, forceful blade of water for superior cleaning.
- BerrySoft® is a light spray that gently washes fruits and vegetables.
- DockNetik®, a magnetic docking system that securely locks the sprayhead into place.
- Ceramic disc valves exceed industry longevity standards, ensuring durable performance for life.
- MasterClean™ sprayface features an easy-to-clean surface that withstands mineral buildup.
- High-arch gooseneck swing spout and 360-degree spout rotation offer superior clearance for filling pots and cleaning.
- Single lever handle is simple to use and makes adjusting water temperature easy.
- Temperature memory allows faucet to be turned on and off at the temperature set during prior usage.
- 1.5 gal/min (5.7 l/min) maximum flow rate [max at 60 psi (4.14 bar)]

Material

- Premium metal construction.
- KOHLER finishes resist corrosion and tarnishing.

Installation

- For single-hole installation. (3-hole escutcheon available, sold separately model number K-99272.)
- Flexible supply lines simplify installation.

Recommended Products/Accessories

K-99272 Three-Hole Kitchen Faucet Escutcheon
K-77685 Single-Cartridge Water Filtration System
K-77686 Double-Cartridge Water Filtration System
K-77687 single replacement filter cartridge
K-77688 Replacement Filter Cartridges, Two-Pack

ADA | **CSA B651**

Codes/Standards

ASME A112.18.1/CSA B125.1
NSF/ANSI 61
NSF/ANSI 372
All applicable US Federal and State material regulations
DOE - Energy Policy Act 1992
California Energy Commission (CEC)
ADA
ICC/ANSI A117.1
CSA B651

KOHLER® Faucet Lifetime Limited Warranty

See website for detailed warranty information.

Available Colors/Finishes

Color tiles intended for reference only.

Color	Code	Description
	CP	Polished Chrome
	SN	Vibrant® Polished Nickel
	VS	Vibrant® Stainless
	2BZ	Oil-Rubbed Bronze

KOHLER Faucets

Tournant™

Semi-Professional Kitchen Sink Faucet

K-77515

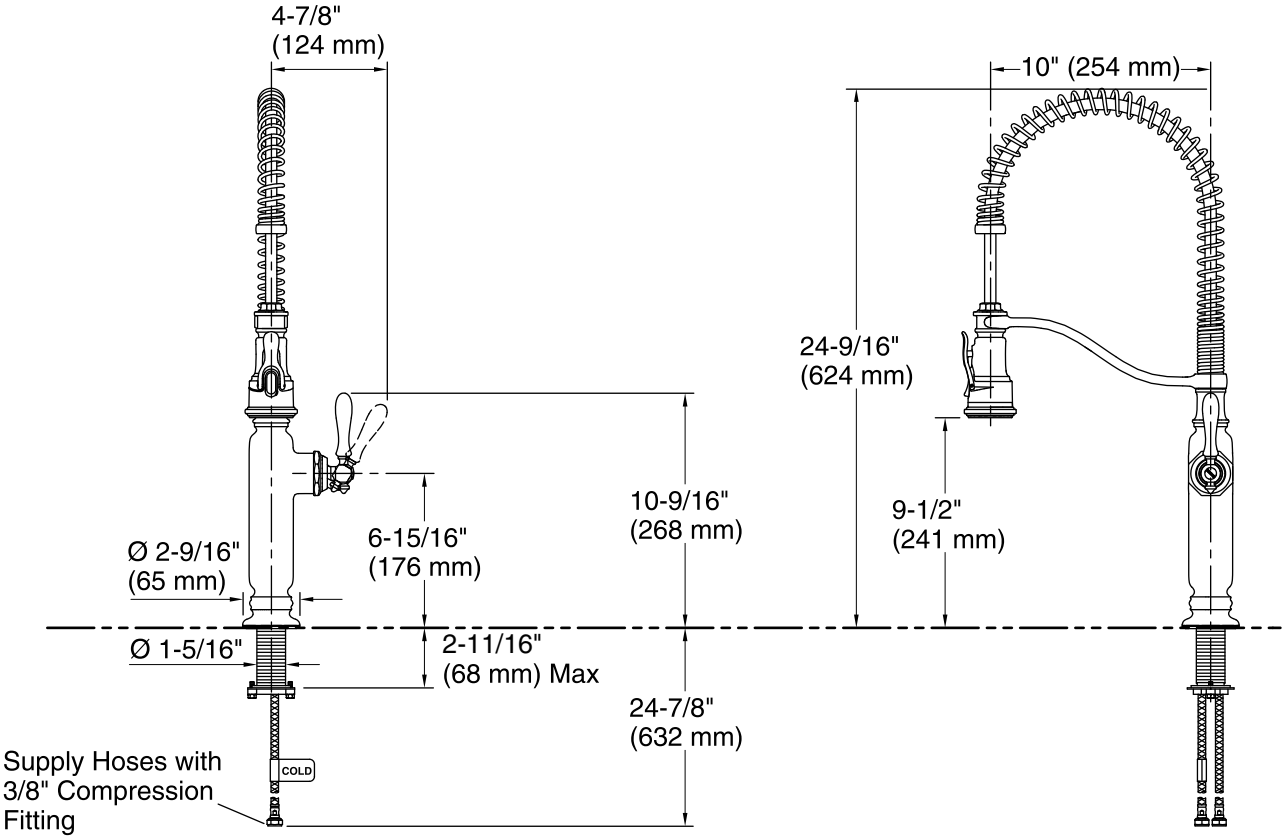

Technical Information

All product dimensions are nominal.

Faucet:

Flow rate:	1.5 gal/min (5.7 l/min)
Pressure:	60 psi (4.1 bar)
Valve body:	Composite

Notes

Install this product according to the installation instructions.

ADA, CSA B651 compliant when installed to the specific requirements of these regulations.