Art No	Description
88888-XXX	SP-Von Staf Sofa Table -Screw Set
88888-XXX	SP-Von Staf Sofa Table -Plastic Feet

VENTURE DESIGN
HOME & INTERIOR

15603-588/15603-888

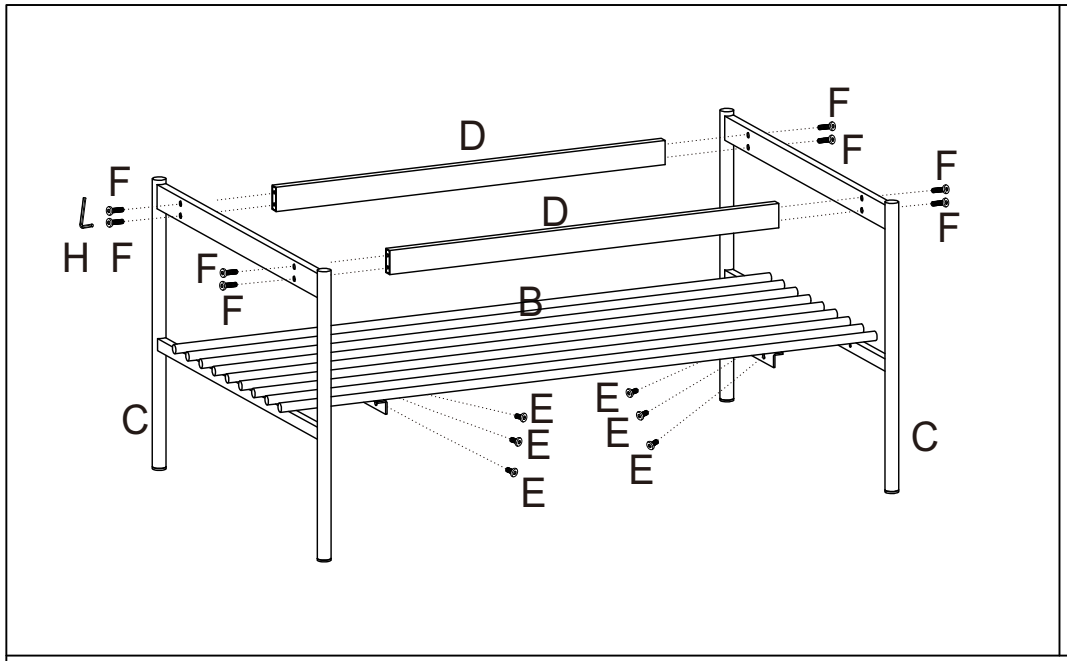

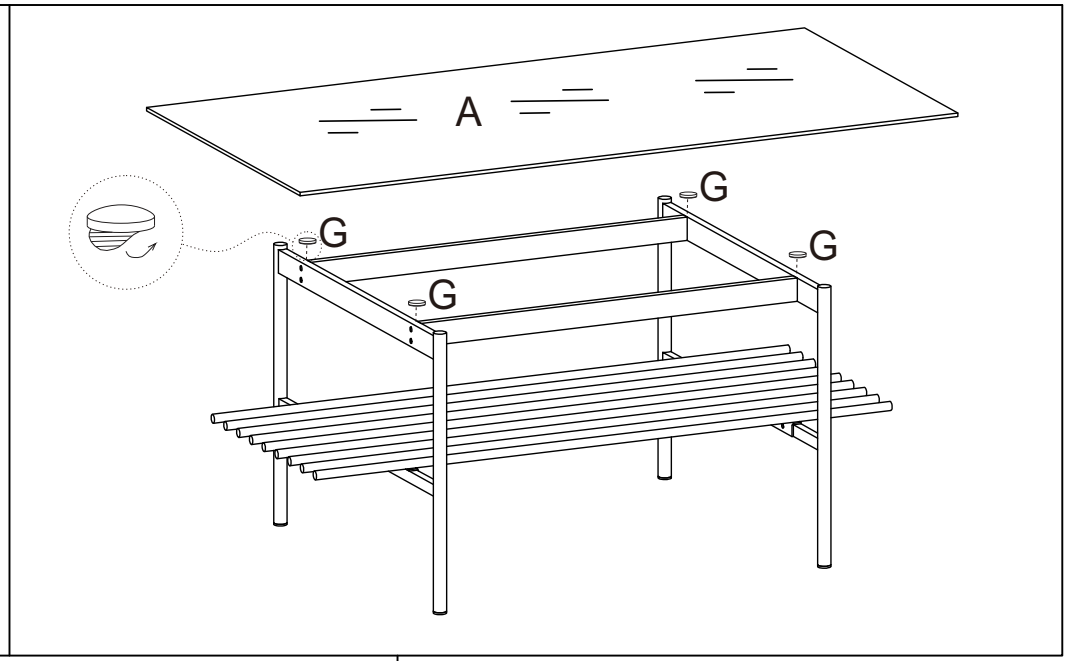

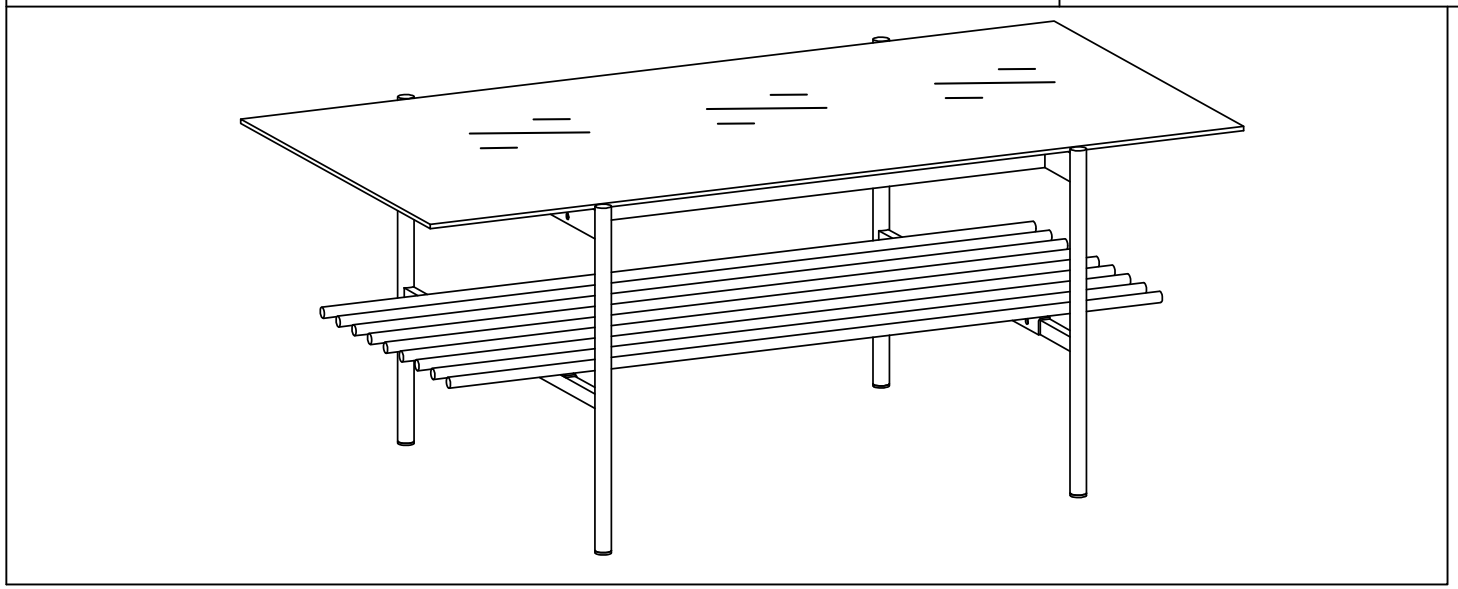

A		1	
B		1	
C		2	
D		2	
E		6	88888-XXX
F		8	88888-XXX
G		4	88888-XXX
H		1	88888-XXX