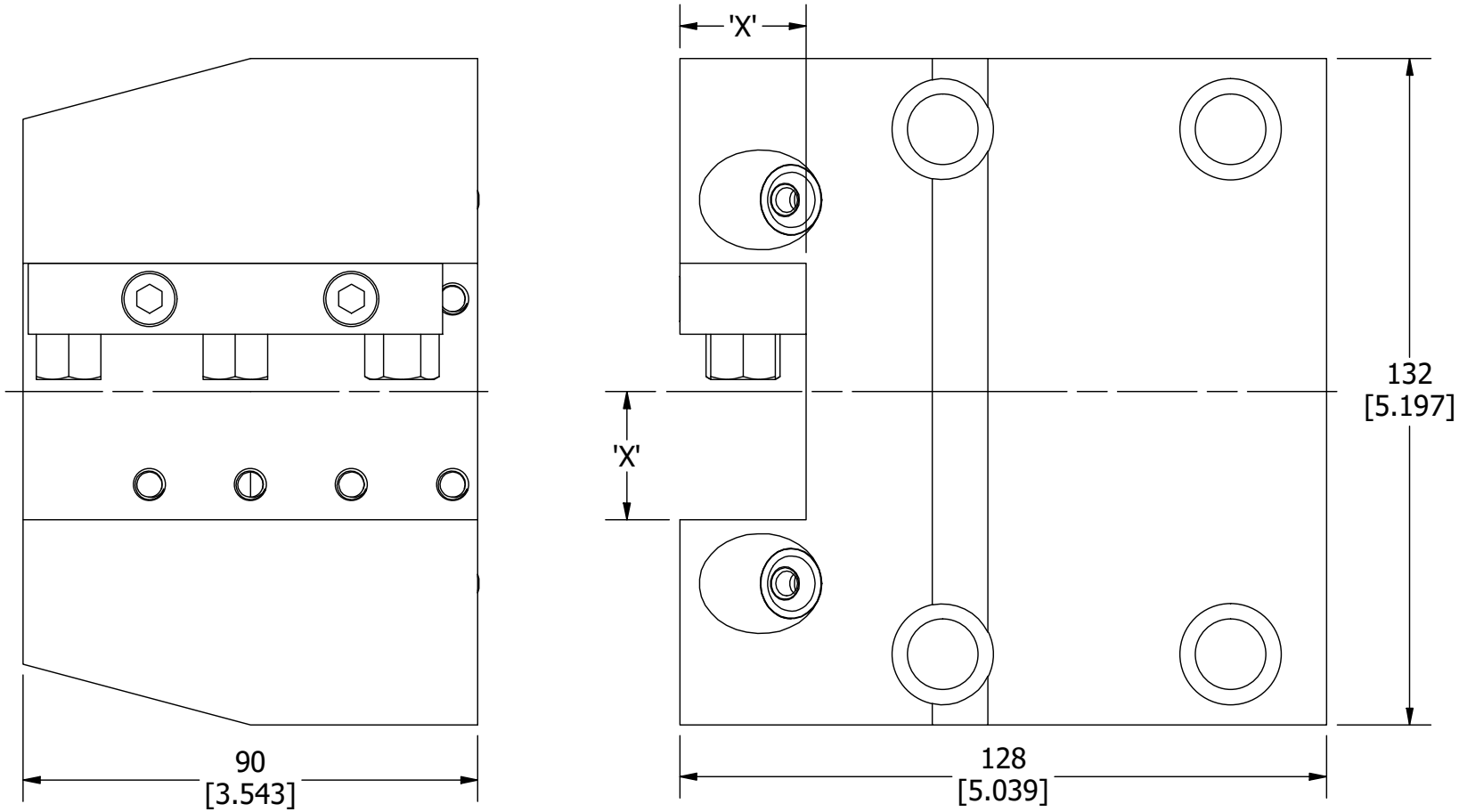
'X'
'X'
132
[5.197]
90
[3.543]
128
[5.039]